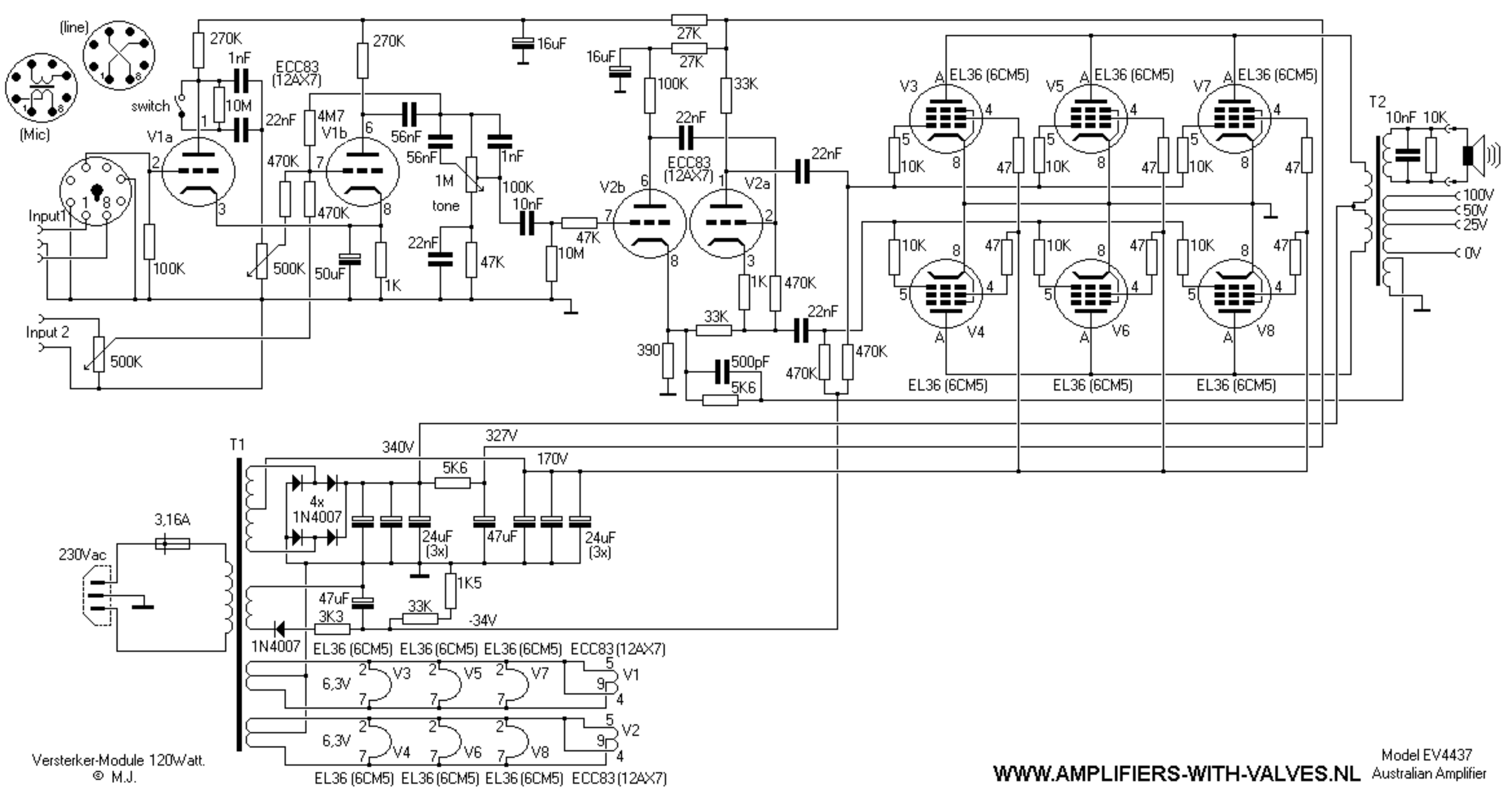
(line)
(Mic)
Input1
Input 2
switch
270K
1nF
10M
22nF
ECC83
(12AX7)
V1a
V1b
4M7
470K
100K
500K
50uF
1K
56nF
1M
tone
22nF
47K
1nF
100K
10nF
10M
16uF
27K
100K
33K
V2b
V2a
390
500pF
5K6
1K
470K
33K
V3
V5
V7
V4
V6
V8
EL36 (6CM5)
10K
47
T2
10nF
100V
50V
25V
0V
T1
340V
327V
170V
4x
1N4007
24uF
(3x)
47uF
1K5
-34V
3K3
3,16A
230Vac
6,3V
ECC83 (12AX7)
V1
V2
Versterker-Module 120Watt.
© M.J.
WWW.AMPLIFIERS-WITH-VALVES.NL
Model EV4437
Australian Amplifier