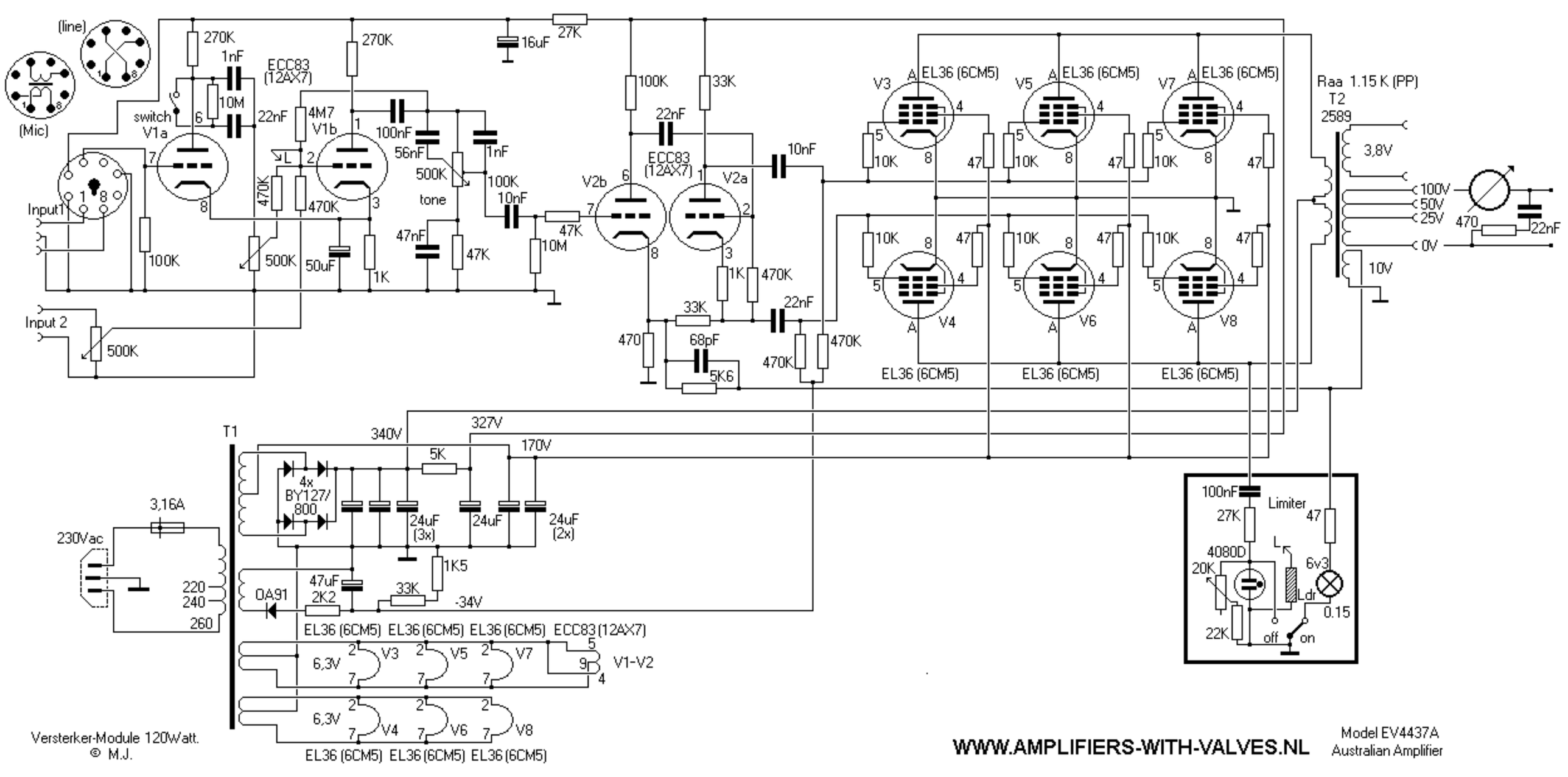

Versterker-Module 120Watt.
© M.J.

WWW.AMPLIFIERS-WITH-VALVES.NL

Model EV4437A
Australian Amplifier